Dual buffer Architecture for high-speed Communication System

Ramya P
Dept of ECE, CIT
KR Puram,Bengaluru-560036
Karnataka,India
ramyapadiralu@gmail.com

Sri lakshmi JP
Dept of ECE, CIT
KR Puram,Bengaluru-560036
Karnataka,India
srilakshmi2921@gmail.com

Shreemurali A
Dept of ECE, CIT
KR Puram,Bengaluru-560036
Karnataka,India
Shreemurali13805@gmail.com

Ranjithkumar TV
Dept of ECE, CIT
KR Puram,Bengaluru-560036
Karnataka,India
ranjithkumartv432@gmail.com

***Abstract*—Good data buffering is essential in contemporary high-speed communication systems for reducing latency, boosting throughput, and ensuring data integrity under different load circumstances. This essay offers the design and comparative study of a Dual Buffer Architecture suited for quick data transfer. Two parallel buffers that work in a ping-pong manner are incorporated in the suggested design to guarantee constant data flow and lower read/write contention. Hardware description languages (HDLs) are used to implement and synthesize the design on an FPGA platform. Performance indicators including area utilization, power consumption, latency, and throughput are examined and contrasted to traditional single-buffer and FIFO-based designs. Results from simulations show that the dual buffer design is perfectly suited for use in applications in multimedia data streams, network-on-chip (NoC) systems, and real-time communication protocols as it greatly improves data handling efficiency, lowers unused cycles, and enables higher data rates. The study also emphasizes trade-offs between intricacy and performance, thereby offering insights into next-generation communication's buffer optimization techniques.**

Keywords—Dual Buffer Architecture,High-Speed Communication,Data Throughput,Latency Reduction,FPGA Implementation,Data Buffering,Real-Time Systems,Hardware Design,VHDL/Verilog.

I. INTRODUCTION

In communication systems, buffering helps to control the timing discrepancies between data producer and consumer blocks. Because of concerns like data contention, idle clock cycles, and limited throughput, conventional single-buffer and FIFO (First-In-First-Out) designs, though, often find it difficult to satisfy the performance demands of high-speed systems. This study suggests and examines a Dual Buffer Architecture to overcome these restrictions that allows simultaneous read and write activities via a ping-pong approach, thereby lowering latency and maximizing throughput.

Hardware description languages (HDLs) are used to model the suggested design, which is then realized on FPGA platforms to verify its real-world performance. Key performance indicators including data throughput, latency, area use, and power consumption are assessed and contrasted with traditional buffer methods. The study offers clarity on how high-speed communication environments can be greatly impacted by buffer architecture design on general system efficiency.

A. Significance of Dual buffer Architecture for high-speed Communication System.

Effective data management is essential in high-speed communication networks to guarantee continuous and flawless data transfer. Because of read-write conflicts and idle cycles, traditional single-buffer systems frequently experience delays that can lower total performance. The Dual Buffer Architecture solves this issue by enabling concurrent read and write operations utilizing two switching buffers—usually referred to as a ping-pong buffer system.

Where speed and low latency are critical—as in real-time applications like video streaming, sensor data analysis, and embedded systems—this architecture is especially relevant. The dual buffer system increases system responsiveness and dependability by minimizing data bottlenecks and increasing throughput.

Moreover, building and evaluating this architecture with hardware description languages or FPGA offers actual knowledge on maximizing resource utilization, power consumption, and scalability for future communication technologies including 5G/6G, IoT, and high-performance computing.

B. Challenges of Dual buffer Architecture for high-speed Communication System

Difficulties in Creating Dual Buffer Architecture for High-Speed Communication System

1. Complexity in synchronization

Accurate control logic is needed when read and write operations between two buffers are coordinated. Particularly at high clock rates, one of the main design challenges is ensuring timing mismatches do not cause data to be read incorrectly or written over.

2. Management Logic Overhead

Implementing the ping-pong mechanism requires more control circuitry to handle access arbitration, status markers (full/empty), and buffer switching. This both complicates design and increases the probability of logical errors.

3. Employing Resources

Single-buffer systems use less hardware resources (memory blocks, logic elements) than do dual buffers. Particularly in

area-constrained platforms such ASICs or FPGAs, effective resource allocation is rather important.

4. Latency Control

While dual buffers are meant to minimize latency, incorrect buffer switching or ineffective control flow can bring unanticipated delays. Managing and reducing such latency is a sensitive aspect of the design.

5. Electricity Utilization

Using two buffers at once may cause more dynamic power consumption. Especially in portable or battery-operated systems, power optimization is extremely important.

6. Overflow Management and Data Integrity

Fast read/write transitions make it difficult to guarantee data integrity. Designers should also put in place systems to gracefully manage buffer overflow or underflow circumstances.

7. Scalability for changing Data Rates

Another major difficulty is developing a dual buffer system capable of adjusting to many data rates and formats without sacrificing performance. Under changing loads, fixed designs may underperform.

II. Methodology

Starting with an examination of the shortcomings of conventional single-buffer and FIFO-based architectures—especially their inability to effectively enable concurrent read and write operations without latency penalties—the process According to this study, two memory blocks working in a ping-pong fashion define a dual buffer system: while one buffer is actively collecting input data, the other is continuously transmitting formerly stored data for additional processing or transfer.

The design is modeled using hardware description languages (HDL) such VHDL or Verilog to help to realize this architecture. Control logic is created to handle buffer switching, synchronization, and thereby avoid read/write conflicts. Following functional simulation at the behavioral and structural levels, the design is synthesized and applied on a Field-Programmable Gate Array (FPGA) platform using development tools such Xilinx Vivado. The FPGA implementation supports hardware-level testing and validates real-time performance.

Data throughput, latency, power usage, and resource utilization are key performance metrics measured and compared against traditional buffer systems. Analysis reports for power, simulation waveforms, and timing diagrams help to support the evaluation. Particularly in maintaining continuous data flow, lowering idle cycles, and improving system responsiveness in high-speed communication applications, the findings from the comparative study help to highlight the practical benefits of the dual buffer design.

A. Scope and Importance

This study aims at creating and assessing a dual buffer architecture to enhance data management in fast communication systems. Simultaneous read and write operations allow the system to minimize latency and boost data throughput against conventional buffering approaches. On an FPGA, the design is carried out to confirm real-time performance and efficiency. Fast and dependable data transmission is critical in contemporary applications like embedded systems, video processing, and network-on-chip platforms, therefore this work is significant. For next-generation technologies, the suggested architecture fosters the creation of scalable, low-power, high-performance communication systems.

III. Literature survey

applications needing real-time performance and low latency, effective data buffering is an essential element of high-speed communication systems. Many research have examined techniques for data flow management between processing units and communication interfaces including single-buffer, circular buffer, and FIFO (First-In-First-Out) architectures.

Single-buffer systems were shown in [1] to be basic and resource-efficient but ineffective at managing simultaneous read and write actions, which caused data stalling and increased latency. Although they still have problems in managing variable data rates and preventing idle cycles during buffer transitions, designs based on FIFO—as covered in [2]—offer better data queuing.

Several real-time data processing systems have suggested dual buffer or ping-pong buffering methods to overcome these constraints. Dual buffer architectures enable simultaneous read and write operations by flipping between two memory blocks, hence reducing latency and increasing throughput, as [3] notes. Compared to conventional buffers, [4] showed in high-speed video processing systems that dual buffers greatly lowered frame loss and enhanced processing efficiency.

Research in [5] expanded on this idea by using dual buffering in FPGA-based systems for Network-on-Chip (NoC) environments, therefore demonstrating better power efficiency and data synchronization. But observations of difficulties included more complex control logic and resource usage were also made. These investigations emphasize the increasing importance of dual buffer topologies in dealing with high-volume, high-speed data streams and call for improved designs.

Though there have been such advances, there is still a shortage of comparative research concentrating on performance trade-offs between single, FIFO, and dual buffer systems under consistent conditions. By giving a thorough design and performance comparison, this study hopes to help to close that gap and so allow for more educated selection of buffer systems for next-generation communication networks.

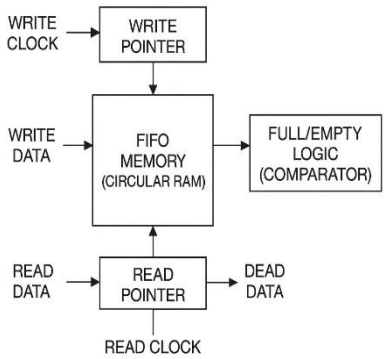

IV. Software Used

V. Experimental Result

VI. Conclusion

HDL-based modeling and FPGA deployment, the dual buffer system showed outstanding performance in terms of speed, responsiveness, and continuous data flow. The suggested architecture employs a ping-pong buffering mechanism that enables simultaneous read and write operations, hence boosting data throughput and decreasing latency.

Dual buffering enhances real-time data processing as well as offers superior synchronization and stability in systems with changing data loads, as shown by comparative analysis with traditional buffering methods. Although the design adds more control logic and resource use, these trade-offs are warranted by the gains in system performance particularly in applications such embedded communication systems, video processing, and Network-on-Chip (NoC).

Optimizing power consumption, lowering control logic complexity, and modifying the architecture for dynamic data rate environments could be among future projects. The results of this research help to build next-generation technologies' appropriate effective, scalable, high-performance communication systems.

VII. References

[1] A. Patel and R. Mehta, “Design and Implementation of Low-Power Single Buffer in Communication Systems,” International Journal of Computer Applications, vol. 96, no. 15, pp. 12–15, June 2014.

[2] M. Y. Hossain and S. Rahman, “Efficient FIFO Buffer Design for High-Speed Data Transfer,” in Proc. IEEE ICCE, pp. 237–241, Jan. 2018.

[3] J. Kim and T. Lee, “Ping-Pong Buffering Technique for Real-Time Embedded Systems,” IEEE Transactions on Consumer Electronics, vol. 55, no. 4, pp. 2086–2092, Nov. 2009.

[4]S. A. Saleh and M. I. Elmasry, “High-Throughput Dual Buffer Architecture for Video Processing Applications,” IEEE Transactions on Circuits and Systems for Video Technology, vol. 25, no. 3, pp. 455–464, Mar. 2015.

[5] N. Borkar and P. Agrawal, “Design of Dual Buffer for NoC Routers Using FPGA,” in Proc. IEEE International Symposium on Embedded Systems Design, pp. 87–91, Dec. 2020.

[6] R. S. Ghosh, K. Roy, and R. Venkatesan, “Energy-Efficient Buffer Design for High-Speed Systems,” IEEE Transactions on Very Large Scale Integration (VLSI) Systems, vol. 21, no. 2, pp. 239–248, Feb. 2013.

[7] X. Li and H. Wang, “Efficient Dual-Port Memory Design for Ping-Pong Buffers in FPGA,” in Proc. IEEE International Conference on Reconfigurable Computing and FPGAs, pp. 145–150, Dec. 2017.